Input/output Interface through 8237 (DMA Controller)

An overview of DMA functionality, architecture, and applications

by Istiak Alam

Batch : CSE-20

ID : 0692230005101005

Introduction to 8237 DMA Controller

The 8237 DMA (Direct Memory Access) Controller is an Intel-designed chip that enables direct data transfer between memory and peripherals without CPU intervention, optimizing performance in systems that need fast data processing. It's commonly used in computer systems to improve the efficiency of data-intensive tasks, such as reading from or writing to disks, memory-to-memory transfers, or graphics operations.

Direct Memory Access (DMA) is a method of allowing data to be moved from one location to another in a computer without intervention from the central processor (CPU)

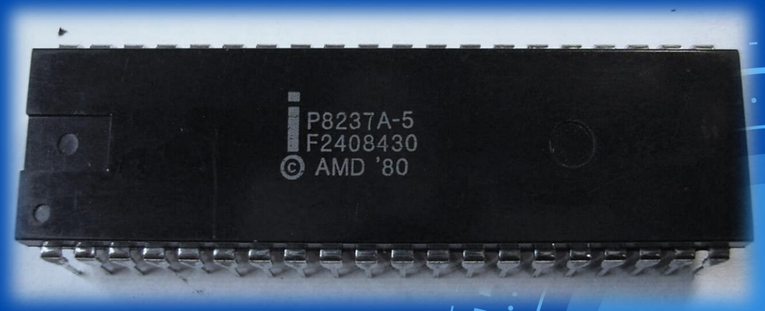

Fig 1 : 8237 DMA controller

8237 DMA Architecture Overview

Address Register: Holds the address of the data block in memory.

Channel Registers: Hold the address and count for each channel

Status and Command Registers: For configuration and status feedback.

Control Logic: Manages the flow of data transfer.

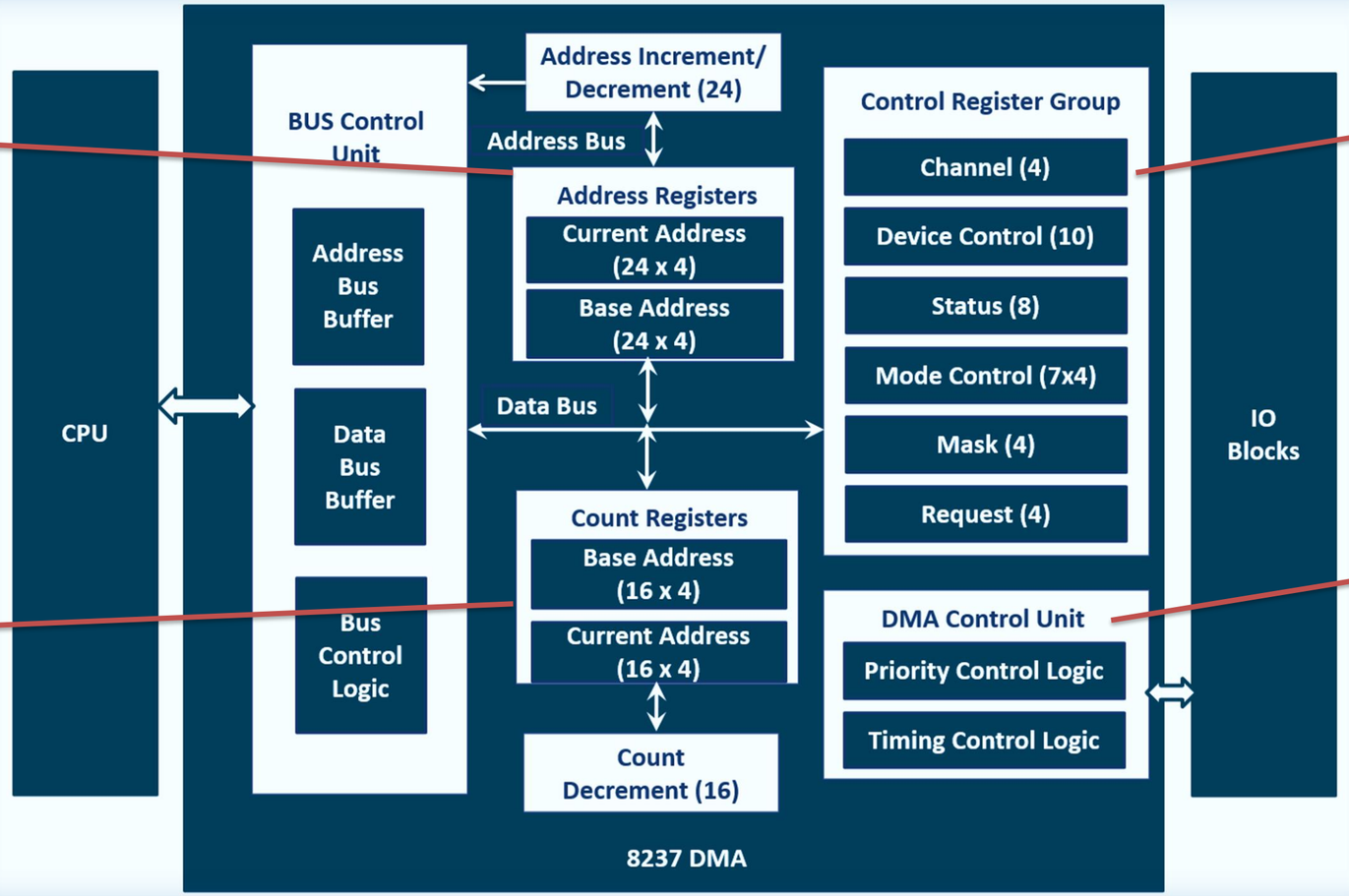

Fig 2 : System Interface of 8237

Pin Configuration of the 8237 DMA Controller

I/O read and write signals.

Memory read and write signals.

Hold Request and Hold Acknowledge for CPU.

DMA Acknowledge outputs

DMA Request inputs for channels 0–3.

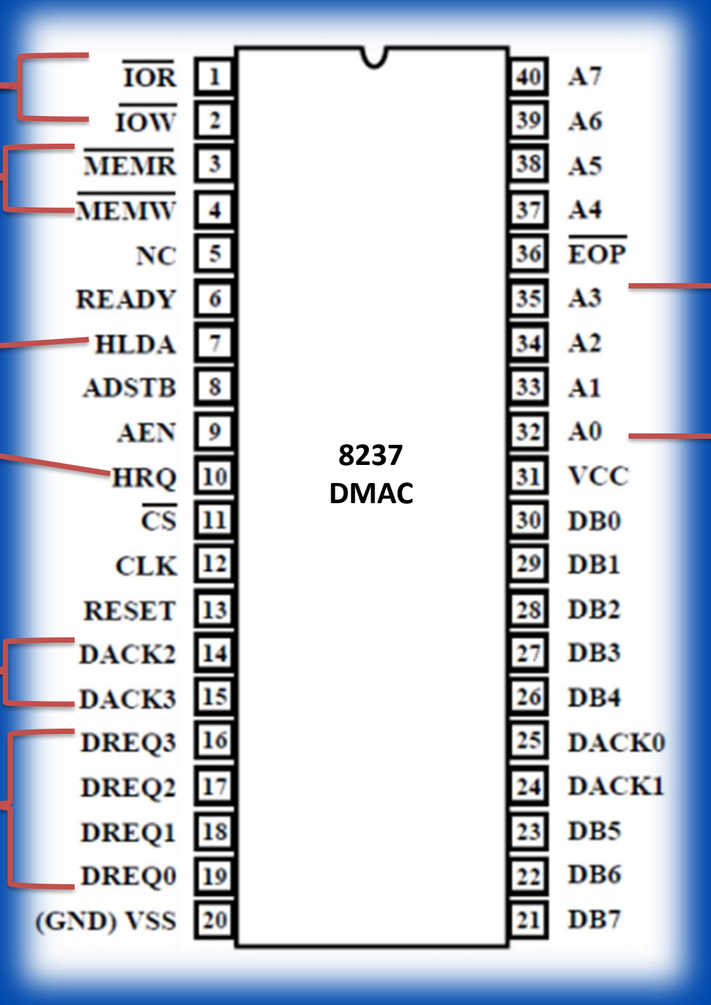

Fig 3 : Pin Configuration

Address inputs for selecting internal registers.

Working of 8237 DMA Controller

1. Peripheral sends a DREQ (DMA request) signal.
2. 8237 sends HRQ (Hold Request) to the CPU.
3. CPU responds with HLDA (Hold Acknowledge).
4. Data transfer begins between memory and peripheral.
5. 8237 releases control back to the CPU once data transfer is complete

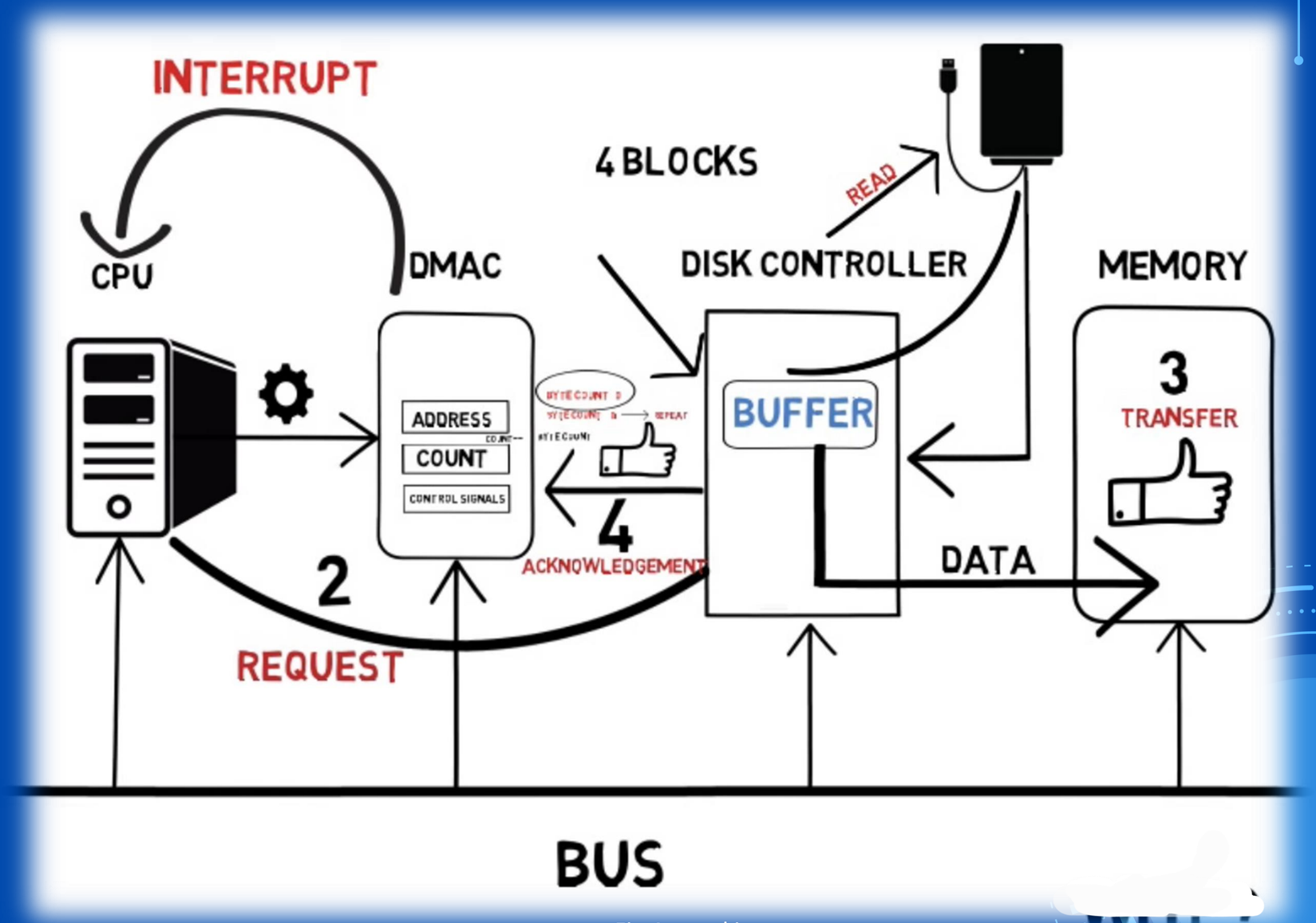

Fig 4 : working process

Interface DMA controller 8237 with 8086

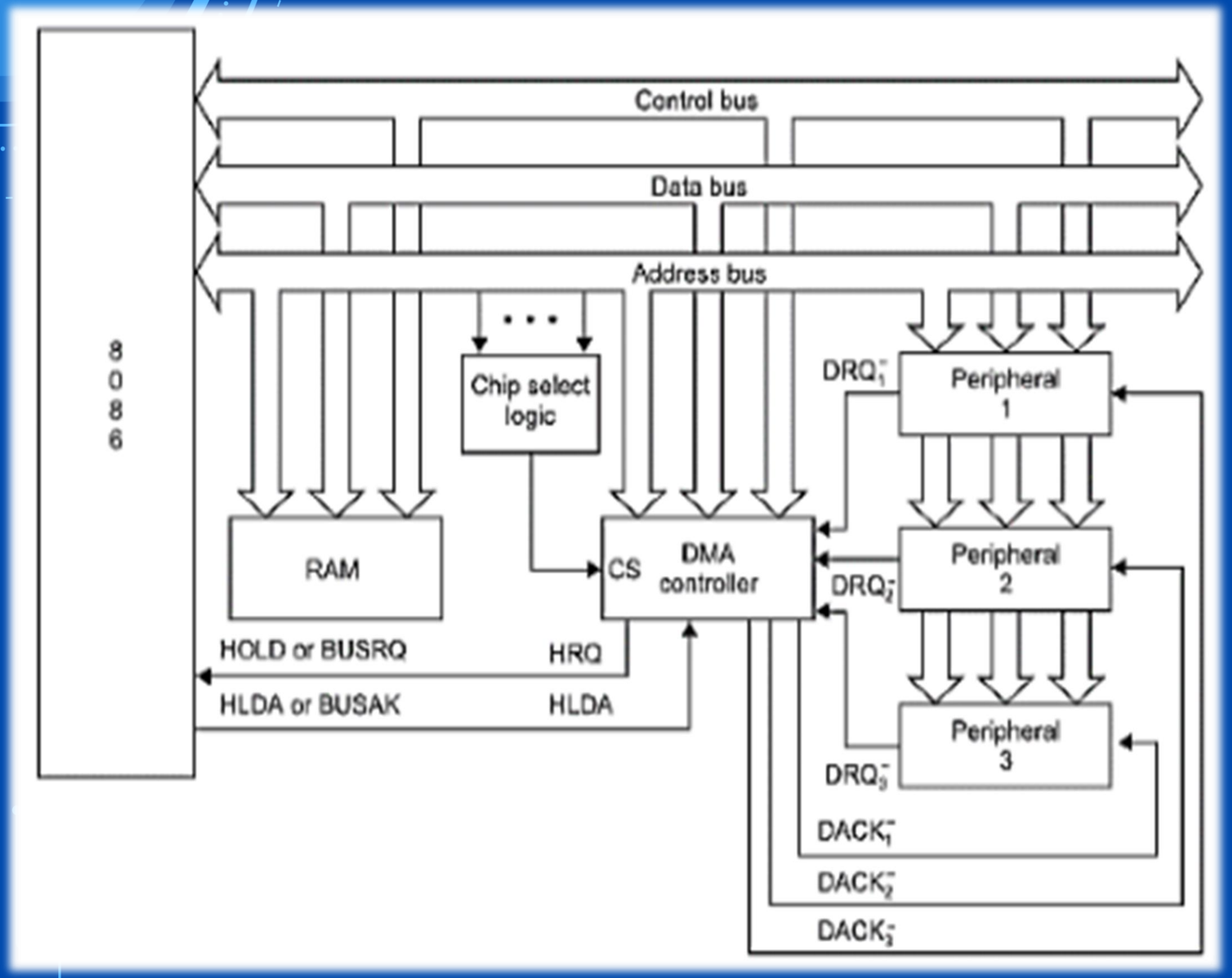

Fig 5 : Interfacing with 8086

1. Bus Control Signals (HRQ and HLDA):

The 8237 uses HRQ (Hold Request) to request control of the system bus from the 8086. In response, the 8086 issues HLDA (Hold Acknowledge) to grant bus control, allowing the 8237 to access memory directly without CPU involvement.

2. Address and Data Bus:

The address bus and data bus are shared between the 8086 and the 8237. The 8237 uses these buses to access specific memory locations where data needs to be read or written.

3. Control Signals:

MEMR (Memory Read) and MEMW (Memory Write) Used by the 8237 to signal memory read or write operations. IOR (I/O Read) and IOW (I/O Write) Used to read from or write to peripheral devices.

4. DMA Channels:

The 8237 has four DMA channels (DREQ0–DREQ3), each capable of handling independent data transfer requests from connected peripherals. Each channel has an associated DACK (DMA Acknowledge) signal, which is sent back to the requesting device to confirm data transfer.

5. Interrupt Handling:

Once the data transfer is complete, the 8237 can signal the 8086 via an interrupt to indicate that the DMA operation is finished, allowing the CPU to regain control of the bus.

Modes of Operation

There are 4 Modes in 8237 DMA Controller :

- **Single Transfer Mode:- Transfers one byte at a time.**
- **Block Transfer Mode:- Transfers entire blocks of data.**
- **Demand Transfer Mode:- Transfer as long as the peripheral requests.**
- **Cascade Mode:- Supports multiple 8237 controllers.**

Applications of 8237 DMA Controller

- Disk drive Controller
- Graphics and Video Processing
- Audio Processing
- Network Interface Controllers (NICs)
- Printers and Scanners
- Real-Time Embedded Systems
- Memory-to-Memory Data Transfers
- Multimedia Systems
- Data Acquisition Systems
- Communication Systems

Advantages of Using 8237 DMA Controller

- Reduced CPU Load
- Increased Data Transfer Speed
- Multiple Transfer Modes
- Large data Transfer
- Multichannel Support
- Reduced Latency in I/O Operations
- Improved System Performance
- Energy Efficiency

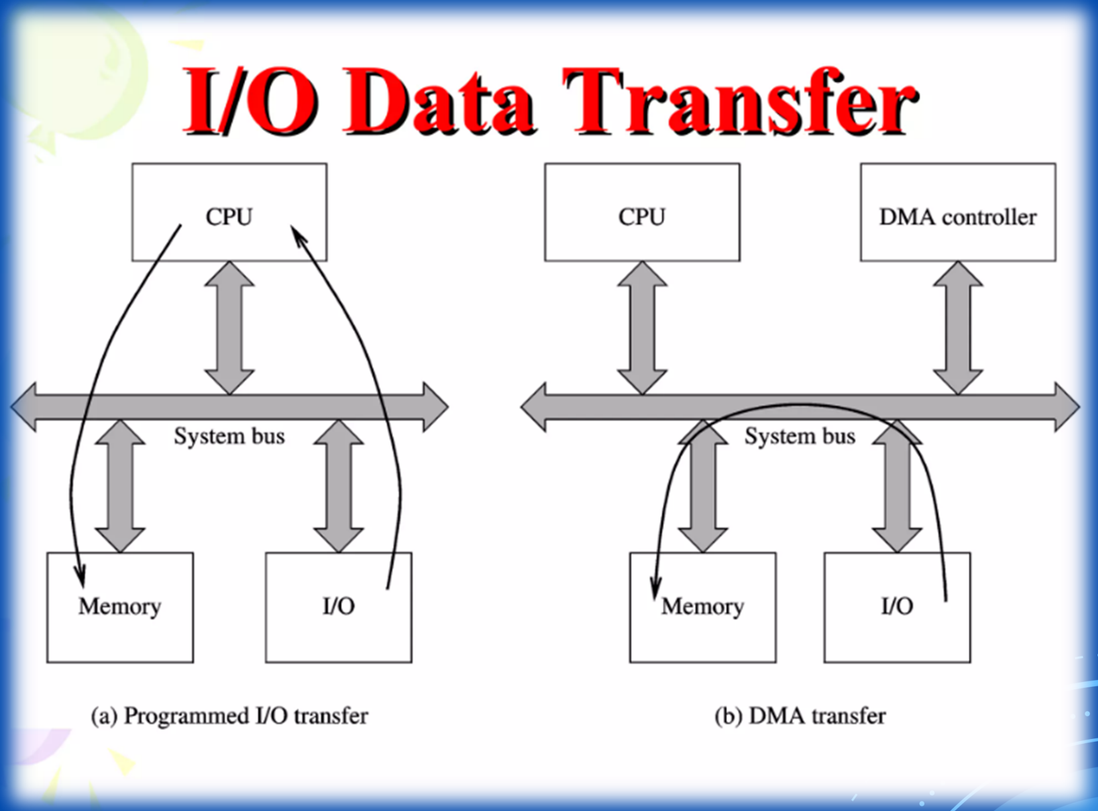

Fig 6 : Compare with CPU

Features of INTEL 8237 DMA

- Enable/Disable Control of Individual DMA Requests
- Four Independent DMA Channels
- Independent Auto initialization of All Channels
- Memory-to-Memory Transfers
- Memory Block Initialization
- Address Increment or Decrement
- High Performance: Transfers up to 1.6M Bytes/Second with 5 MHz 8237A-5
- Software DMA Requests
- End of Process Input for Terminating Transfers

CONCLUSION

In conclusion, the 8237 DMA Controller is an essential component in efficient data transfer and I/O operations, allowing direct memory access by peripherals without constant CPU intervention. With its multichannel support, flexible transfer modes, and ability to handle large data volumes, the 8237 significantly enhances system performance, reduces CPU load, and enables multitasking in complex applications. Its use in multimedia, real-time systems, and data-heavy applications highlights its versatility and importance in modern computing and embedded systems. The 8237's advantages make it an invaluable tool in achieving high-speed, efficient data processing.

THANK YOU